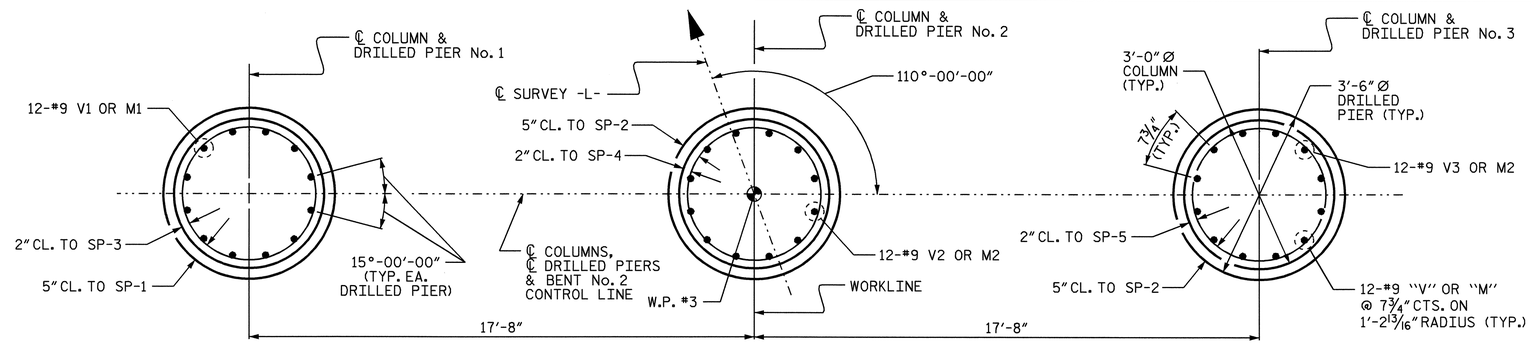


## PLAN OF DRILLED PIERS

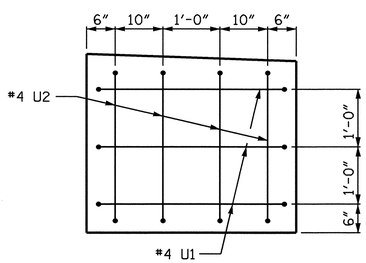


## VIEW X-X

(TYP. EA END)

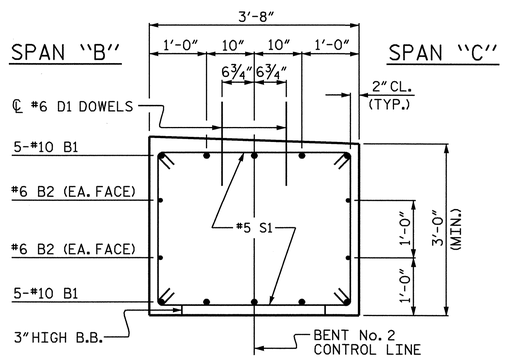


## SECTION A-A

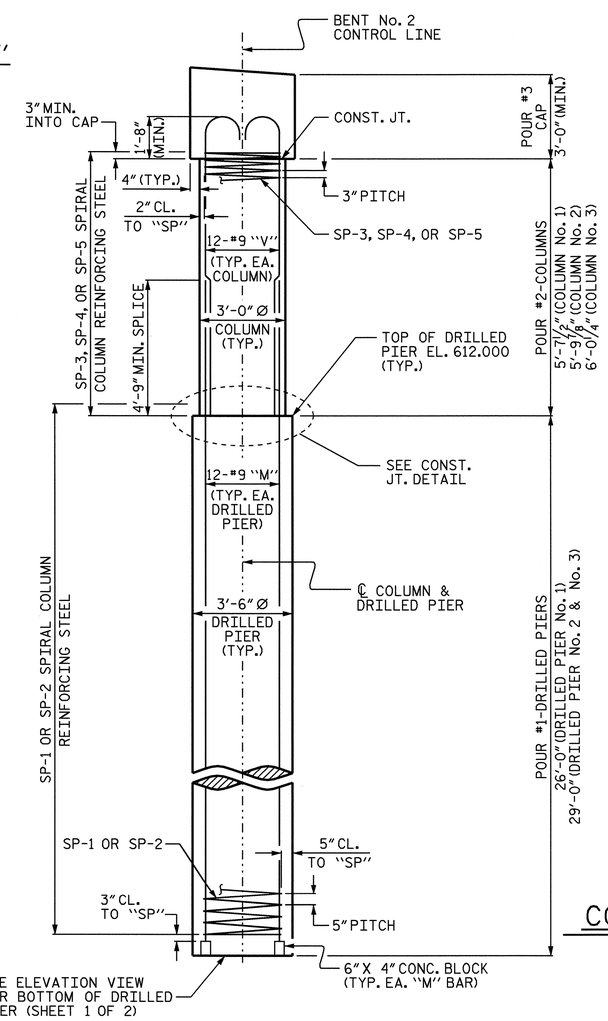


## END ELEVATION

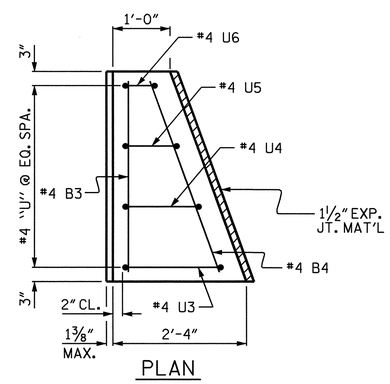


## LATERAL GUIDE DETAIL

(LEFT LATERAL GUIDE SHOWN, RIGHT SIDE SIMILAR)

## BAR TYPES

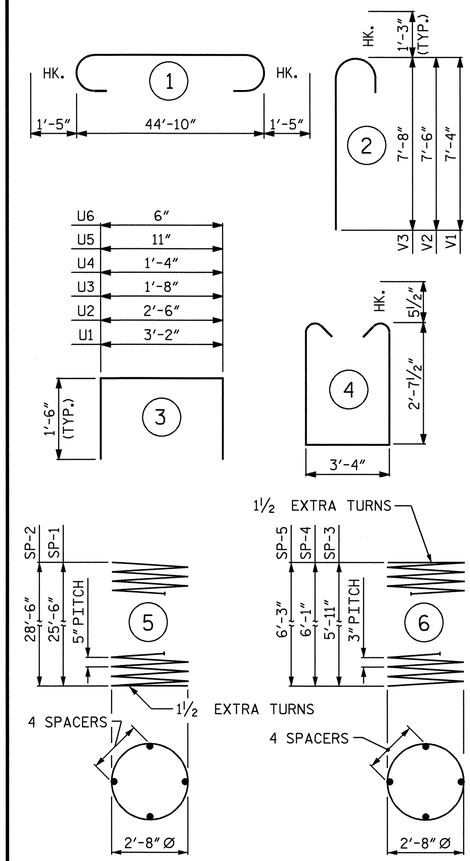


ALL BAR DIMENSIONS ARE OUT TO OUT.

## BILL OF MATERIAL

### BENT No. 2

| BAR | NO. | SIZE | TYPE | LENGTH | WEIGHT |
|---|---|---|---|---|---|
| B1 | 10 | 10 | 1 | 47′-8″ | 2051 |
| B2 | 4 | 6 | STR | 45′-0″ | 270 |
| B3 | 2 | 4 | STR | 3′-4″ | 4 |
| B4 | 2 | 4 | STR | 3′-6″ | 5 |
| D1 | 52 | 6 | STR | 1′-6″ | 117 |
| M1 | 12 | 9 | STR | 33′-3″ | 1357 |
| M2 | 24 | 9 | STR | 36′-3″ | 2958 |
| S1 | 48 | 5 | 4 | 9′-6″ | 476 |
| U1 | 6 | 4 | 3 | 6′-2″ | 25 |
| U2 | 8 | 4 | 3 | 5′-6″ | 29 |
| U3 | 2 | 4 | 3 | 4′-8″ | 6 |
| U4 | 2 | 4 | 3 | 4′-4″ | 6 |
| U5 | 2 | 4 | 3 | 3′-11″ | 5 |
| U6 | 2 | 4 | 3 | 3′-6″ | 5 |
| V1 | 12 | 9 | 2 | 8′-7″ | 350 |
| V2 | 12 | 9 | 2 | 8′-9″ | 357 |
| V3 | 12 | 9 | 2 | 8′-11″ | 364 |
| REINFORCING STEEL | | | | | 8,385 LBS. |
| SP-1 | 1 | ✳ | 5 | 518′-2″ | 540 |
| SP-2 | 2 | ✳ | 5 | 575′-9″ | 1201 |
| SP-3 | 1 | ✳✳ | 6 | 214′-7″ | 143 |
| SP-4 | 1 | ✳✳ | 6 | 214′-7″ | 143 |
| SP-5 | 1 | ✳✳ | 6 | 222′-10″ | 149 |
| SPIRAL COLUMN REINFORCING STEEL | | | | | 2,176 LBS. |

✳ THE SP-1 & SP-2 SPIRAL REINFORCING STEEL SHALL BE W31 OR D-31 COLD DRAWN WIRE OR #5 PLAIN OR DEFORMED BAR.

✳✳ THE SP-3, SP-4, & SP-5 SPIRAL REINFORCING STEEL SHALL BE W20 OR D-20 COLD DRAWN WIRE OR #4 PLAIN OR DEFORMED BAR.

CLASS A CONCRETE (C.Y.)

| | |
|---|---|
| POUR #2 (COLUMNS) | = 4.6 |
| POUR #3 (CAP) | = 18.8 |
| POUR #4 (LATERAL GUIDES) | = 0.2 |
| TOTAL | = 23.6 C.Y. |

DRILLED PIERS:

| | |
|---|---|
| DRILLED PIER CONCRETE (C.Y.) | |
| POUR #1 (DRILLED PIERS) | = 29.9 C.Y. |
| 3′-6″Ø DRILLED PIER IN SOIL | = 55.0 LIN. FT. |
| 3′-6″Ø DRILLED PIER NOT IN SOIL | = 29.0 LIN. FT. |
| PERMANENT STEEL CASING FOR 3′-6″Ø DRILLED PIERS | = 53.4 LIN. FT. |
| CSL TUBES | = 366.0 LIN. FT. |

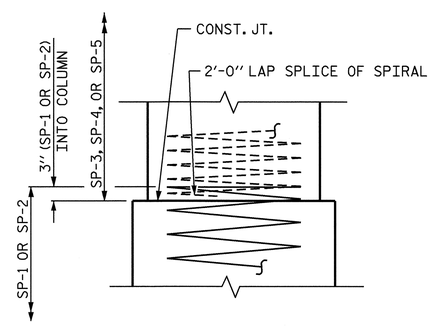


## CONSTRUCTION JOINT DETAIL

PROJECT NO. B-3646

GUILFORD COUNTY

STATION: 16+44.43 -L-

SHEET 2 OF 2

STATE OF NORTH CAROLINA
DEPARTMENT OF TRANSPORTATION
RALEIGH

SUBSTRUCTURE

BENT No. 2

NORTH CAROLINA PROFESSIONAL SEAL 11268 ENGINEER BETSY S. COX

| REVISIONS | | | | | | SHEET NO. |
|---|---|---|---|---|---|---|
| NO. | BY: | DATE: | NO. | BY: | DATE: | S-17 |
| 1 | | | 3 | | | TOTAL SHEETS |
| 2 | | | 4 | | | 28 |

DRAWN BY : P.C. BREWER DATE : 3/17/04
CHECKED BY : M. BRITT DATE : 4/6/04

09-JUN-2004 14:12
wt\squadv\b3646\pbrewer\Microstation\B3646_sd_B2_01.dgn
pbrewer