22-MAY-2003 13:39
W:\Special Details\ericward\stds\02' Stds to Special Details\english\86202\0862d02.dgn
ericward AT DS212260

5/14/99

STATE OF NORTH CAROLINA
DEPT. OF TRANSPORTATION
DIVISION OF HIGHWAYS
RALEIGH, N.C.

ENGLISH DETAIL DRAWING FOR
GUARDRAIL INSTALLATION

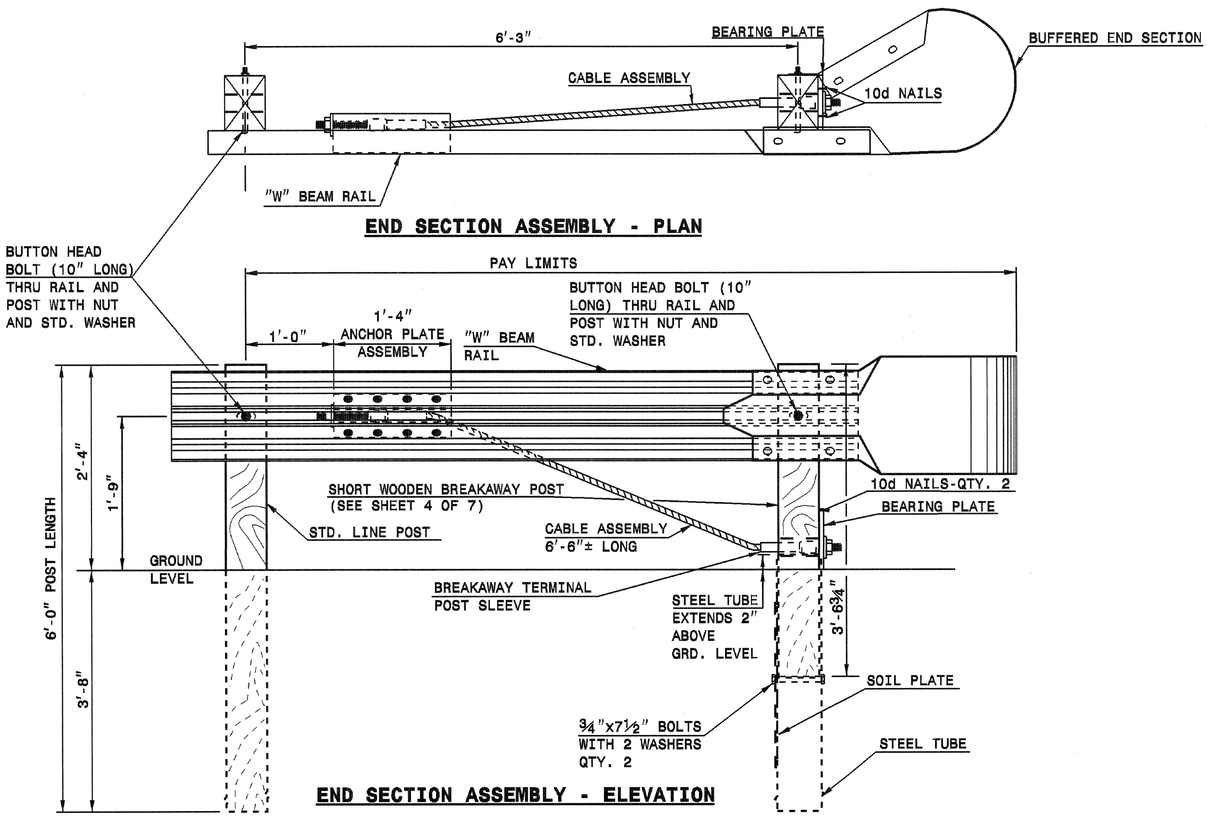

END SECTION ASSEMBLY - PLAN

END SECTION ASSEMBLY - ELEVATION

C.A.T.-1 SYSTEM

SHEET 1 OF 7
862D02

STATE OF NORTH CAROLINA
DEPT. OF TRANSPORTATION
DIVISION OF HIGHWAYS
RALEIGH, N.C.

ENGLISH DETAIL DRAWING FOR
GUARDRAIL INSTALLATION

SHEET 1 OF 7
862D02

STATE OF NORTH CAROLINA
DEPT. OF TRANSPORTATION
DIVISION OF HIGHWAYS
RALEIGH, N.C.

ENGLISH DETAIL DRAWING FOR
GUARDRAIL INSTALLATION

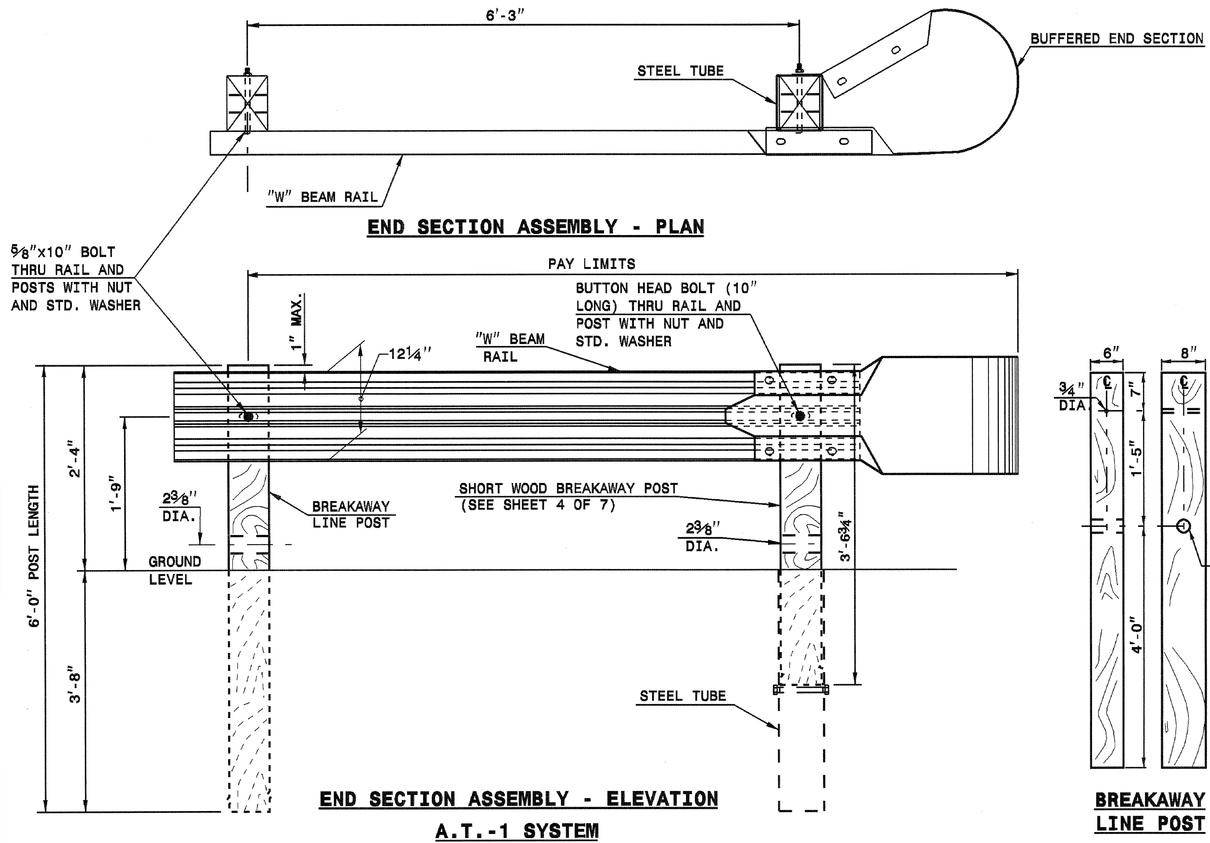

END SECTION ASSEMBLY - PLAN

END SECTION ASSEMBLY - ELEVATION

A.T.-1 SYSTEM

BREAKAWAY LINE POST

SHEET 2 OF 7
862D02

STATE OF NORTH CAROLINA
DEPT. OF TRANSPORTATION
DIVISION OF HIGHWAYS
RALEIGH, N.C.

ENGLISH DETAIL DRAWING FOR
GUARDRAIL INSTALLATION

SHEET 2 OF 7
862D02

DESIGN SERVICES UNIT
STANDARDS AND SPECIAL DESIGN
Office 919-250-4128 FAX 919-250-4119

SEE PLATE FOR TITLE

ORIGINAL BY: 2002 STD. 862.02 DATE:
MODIFIED BY: E.E. WARD DATE: 02-09-03
CHECKED BY: C.B. Wood DATE: 3/14/04
FILE SPEC.: /usr/stds/02todetail/english/86202/862d02.dgn

NORTH CAROLINA PROFESSIONAL ENGINEER SEAL 19761 CYNTHIA B. PERRY
3/14/04

PROJECT REFERENCE NO. B-3607
SHEET NO. 2-B