PROJECT REFERENCE NO.	SHEET NO.
B-2583	EC-4/CONST. 4
HIGHWAY DESIGN ENGINEER	HYDRAULICS ENGINEER

METRIC

CONST.REV.

R/W REV.

NOTE: UTILIZE SPECIAL STILLING BASIN AND TEMPORARY ROCK SEDIMENT DAM TYPE – B AS STILLING BASIN WHERE APPLICABLE.

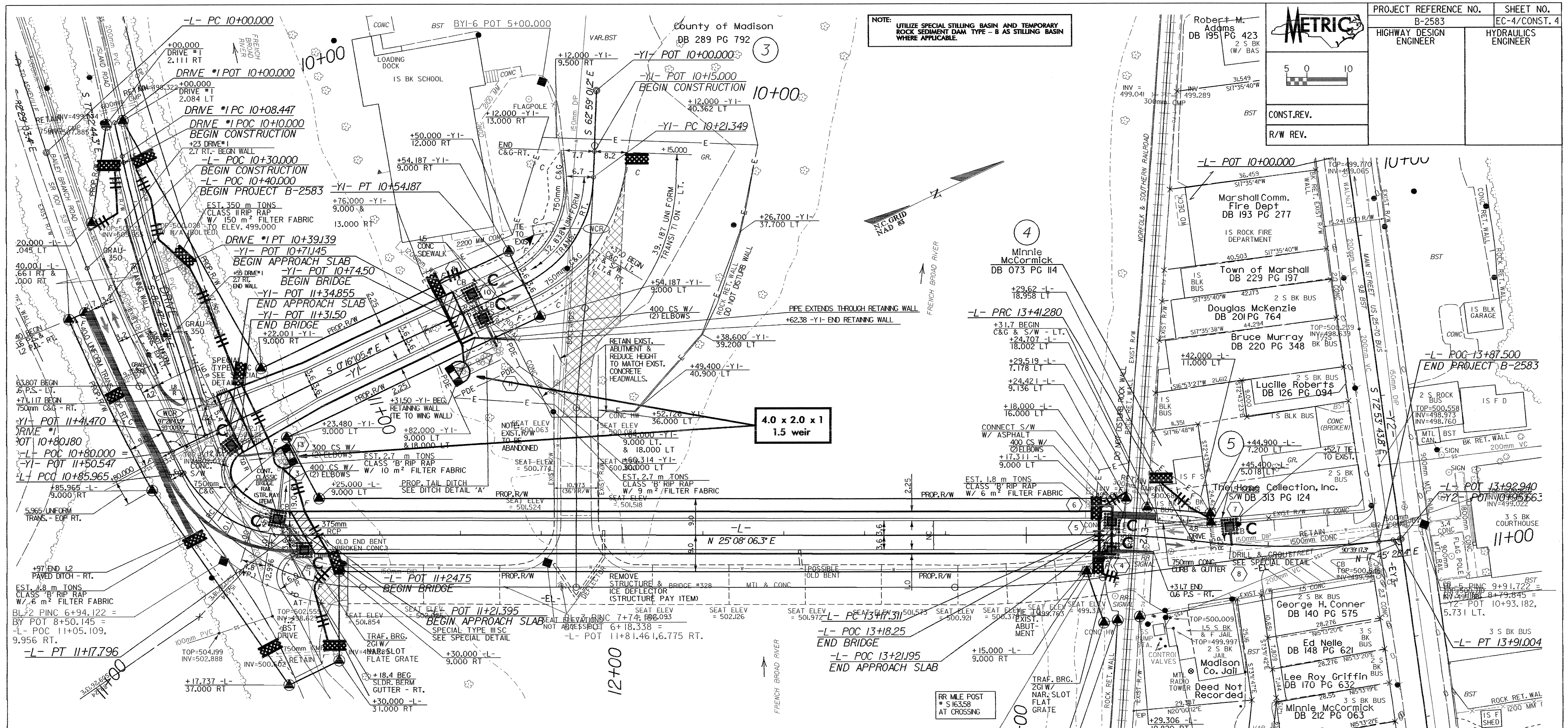

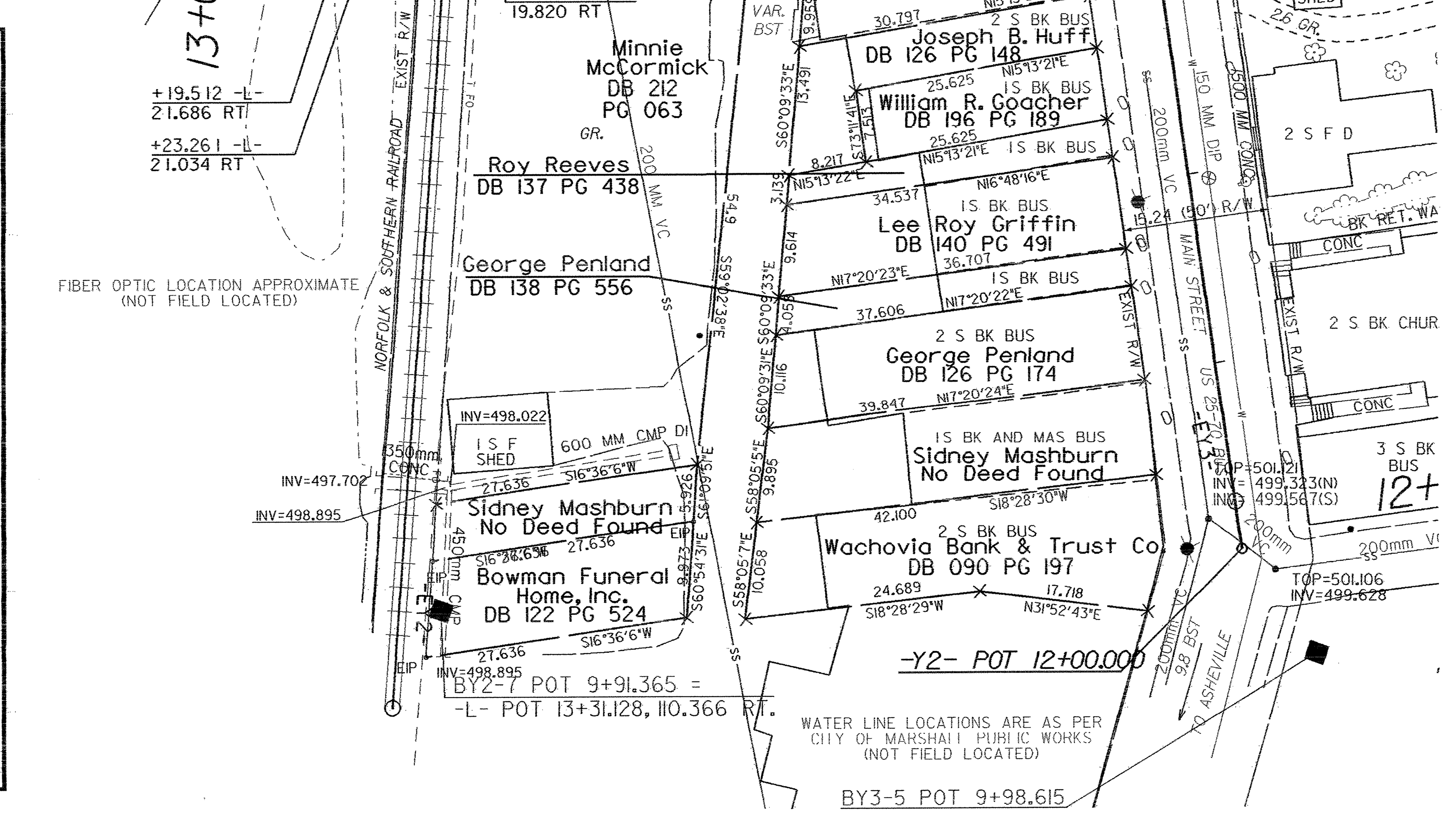

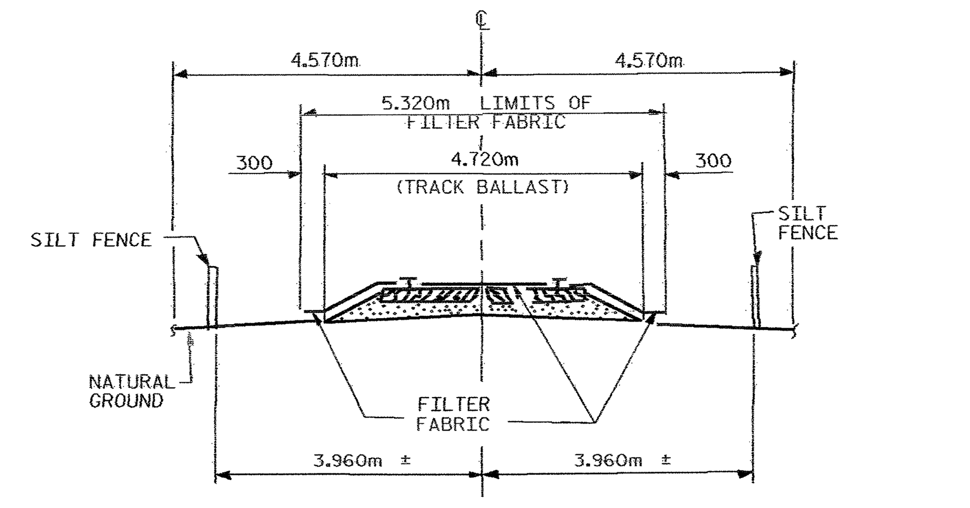

NOTES

RAILROAD EROSION CONTROL MEASURES SHALL BE INSTALLED PRIOR TO PERFORMING ANY WORK IN THE RAILROAD RIGHT-OF-WAY.

ADDITIONAL EROSION CONTROL MEASURES FOR PROTECTION OF RAILROAD DITCHES MAY BE REQUIRED AS DIRECTED BY THE ENGINEER.

NO SEPARATE PAYMENT WILL BE MADE FOR RAILROAD EROSION CONTROL MEASURES.

LIMITS OF SILT FENCE AND FILTER FABRIC PARALLEL TO RAILROAD SHALL EXTEND A MINIMUM OF 3.000m OUTSIDE EDGE OF SUPERSTRUCTURE OR TOE OF SLOPE ON CONSTRUCTION. A GREATER LENGTH OF SILT FENCE OR FILTER FABRIC MAY BE REQUIRED IF SO DIRECTED BY THE ENGINEER.

FILTER FABRIC TO BE NAILED TO TIMBER RAIL TIES WITH PRIME SOURCE "GRIP CAP" OR EQUIVALENT. FILTER FABRIC ON SHOULDER TO BE SECURED AS DIRECTED BY THE ENGINEER AND RAILROAD.

SPECIAL STILLING BASIN WITH ROCK PAD

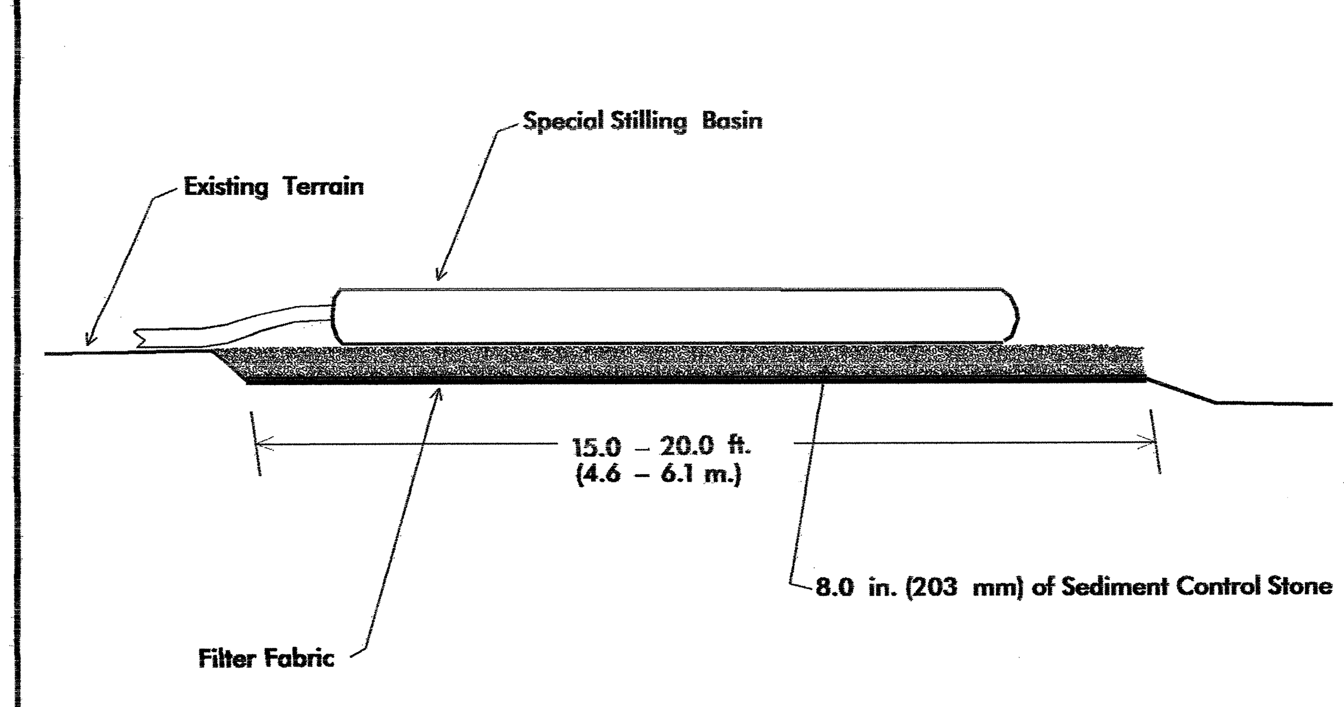

Not To Scale

Note: Provide Stabilized Outlet to Streambank

$FILE$ $TIME$ $DATE$