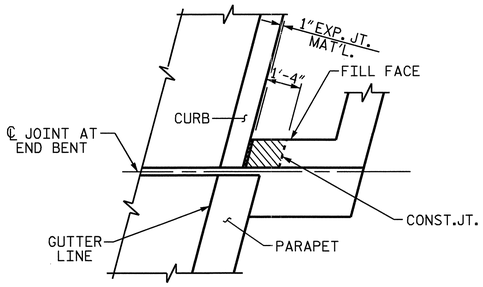

PLAN

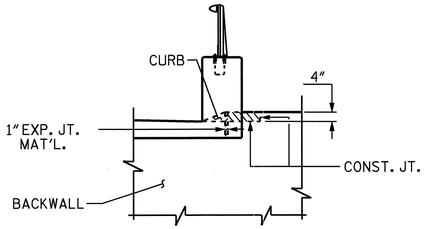

ELEVATION

BLOCKOUT IN WING WALL FOR FITTING EVAZOTE JOINT SEAL

NOTE: THE CONCRETE IN THE CROSS-HATCHED AREA OF THE WING SHALL BE POURED AFTER THE JOINT BETWEEN THE DECK AND APPROACH SLAB HAS BEEN SAWED AND THE PARAPET IS CAST IF SLIP FORMING IS USED.

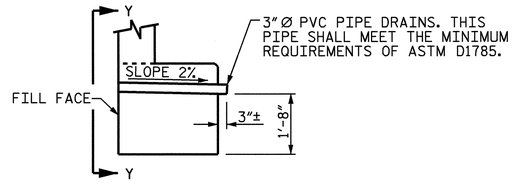

SECTION THRU CAP

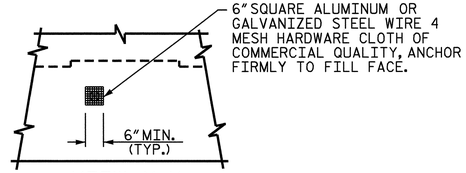

VIEW Y-Y

NOTE: NO SEPARATE PAYMENT WILL BE MADE FOR FURNISHING AND INSTALLING THE PVC PIPE DRAINS, HARDWARE CLOTH, AND FASTENERS. THE ENTIRE COST OF THIS WORK SHALL BE INCLUDED IN THE UNIT CONTRACT PRICE BID FOR THE SEVERAL PAY ITEMS.

PIPE DRAIN DETAILS

BAR TYPES

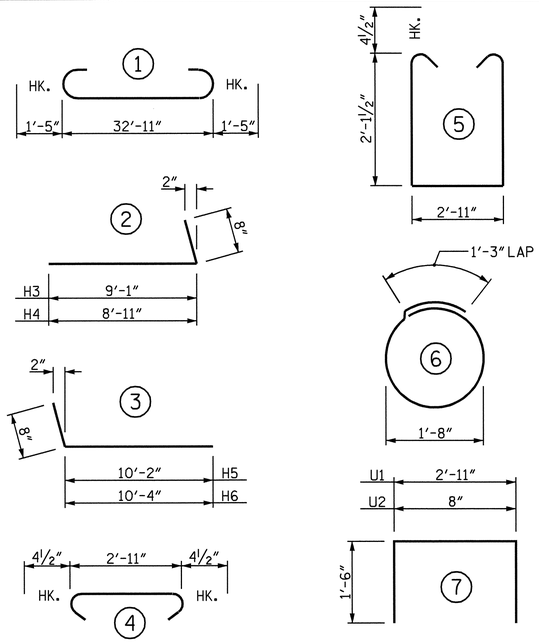

ALL BAR DIMENSIONS ARE OUT TO OUT

BILL OF MATERIAL
END BENT #2

BAR	NO.	SIZE	TYPE	LENGTH	WEIGHT
B1	8	10	1	35'-9"	1231
B2	2	7	STR	33'-1"	135
B3	8	4	STR	17-9"	95
B4	9	4	STR	2'-11"	18
B5	12	4	STR	2'-10"	23
H1	4	4	STR	1'-10"	5
H2	4	4	STR	3'-2"	8
H3	9	4	2	9'-9"	59
H4	9	5	2	9'-7"	90
H5	9	4	3	10'-10"	65
H6	9	5	3	11'-0"	103
K1	16	4	STR	17'-9"	190
S1	30	4	4	3'-8"	73
S2	30	4	5	7'-11"	159
S3	12	4	6	6'-6"	52
U1	9	4	7	5'-11"	36
U2	27	4	7	3'-8"	66
V1	54	5	STR	6'-0"	338
V2	4	4	STR	7'-3"	19
V3	20	4	STR	7'-7"	101
V4	8	4	STR	7'-9"	41
V5	18	4	STR	7'-11"	95
V6	10	4	STR	8'-1"	54
V7	2	4	STR	8'-4"	11
REINFORCING STEEL				LBS.	3067

CLASS 'A' CONCRETE		
POUR #1: CAP & WINGS	C.Y.	12.9
POUR #2: BACKWALL & WINGS	C.Y.	8.9
TOTAL:	C.Y.	21.8

HP 12 X 53 STEEL PILES		
NO. 6	LIN. FT.	90.0

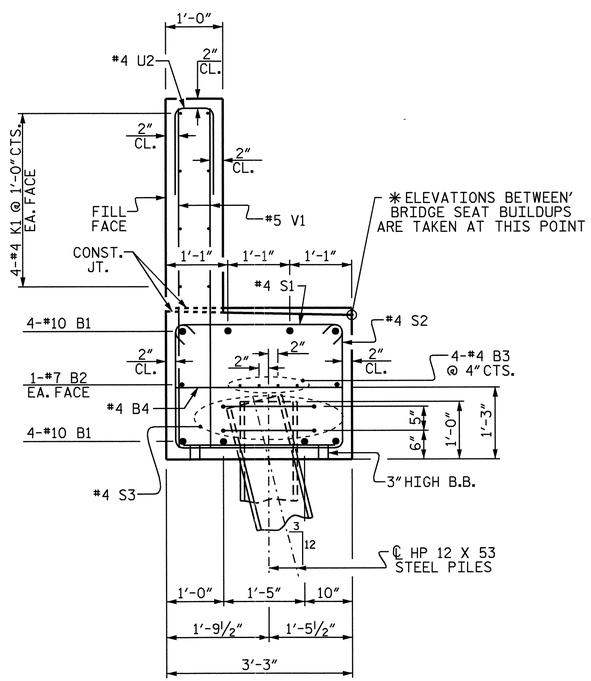

SECTION A-A

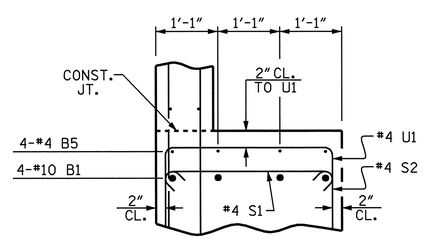

SECTION B-B

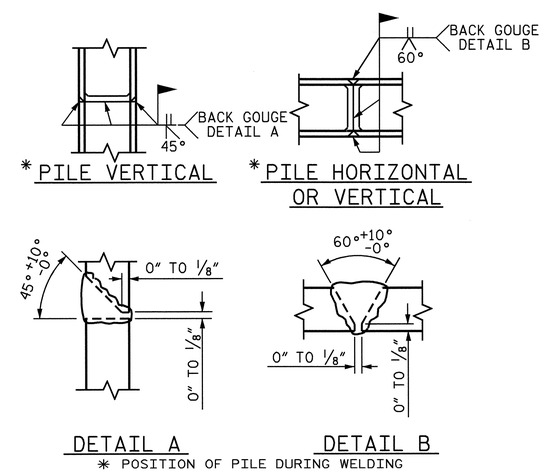

✱ PILE VERTICAL

✱ PILE HORIZONTAL OR VERTICAL

DETAIL A

DETAIL B

✱ POSITION OF PILE DURING WELDING

PILE SPLICE DETAILS

NORTH CAROLINA PROFESSIONAL SEAL 11905 ENGINEER WILLIAM A. DAVIS
11/15/04

PROJECT NO. B-3485
MACON COUNTY
STATION: 15+52.00 -L-

SHEET 3 OF 3

STATE OF NORTH CAROLINA
DEPARTMENT OF TRANSPORTATION
RALEIGH

SUBSTRUCTURE
END BENT #2

REVISIONS						SHEET NO.
NO.	BY:	DATE:	NO.	BY:	DATE:	S-29
1			3			TOTAL SHEETS
2			4			32

DRAWN BY : G.S. HOLMES DATE : 1-16-02
CHECKED BY : P.S. ERVIN DATE : 1-25-02