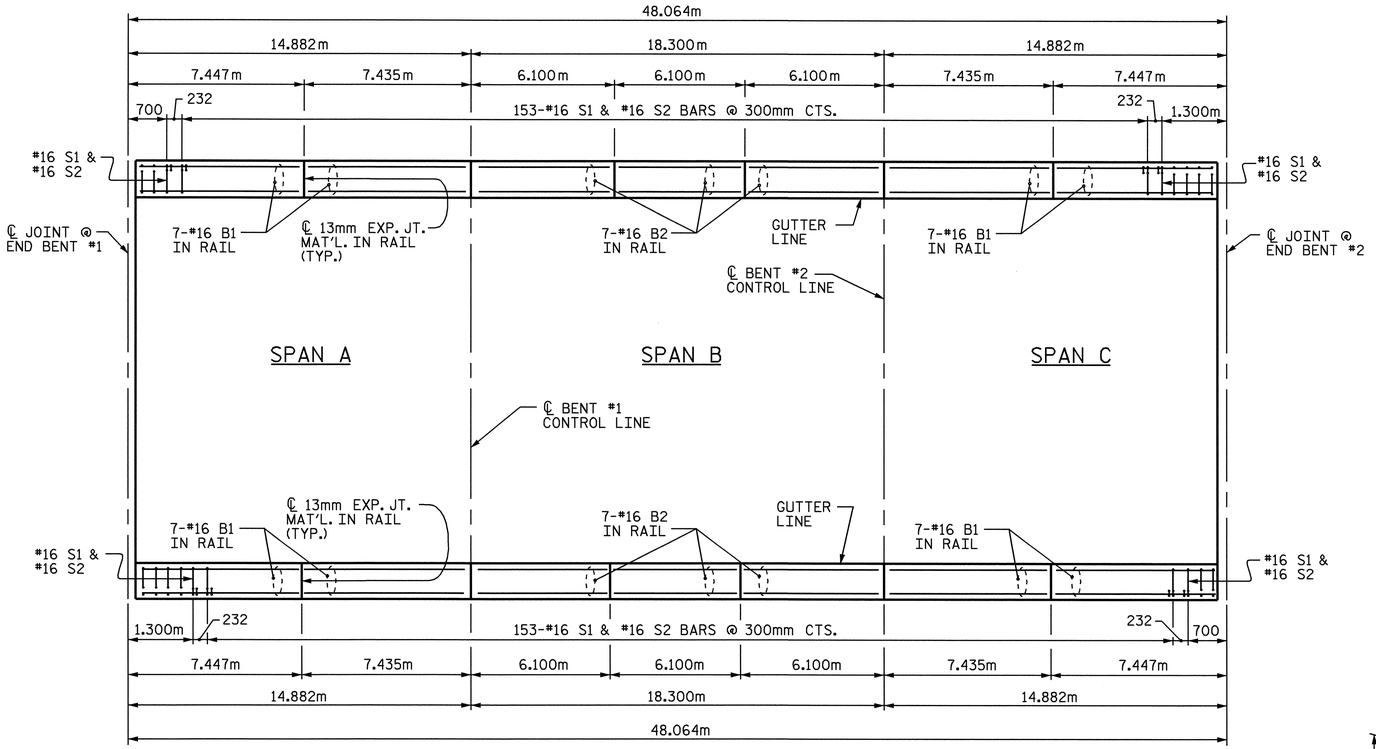

PLAN OF BARRIER RAIL

NOTES

BARRIER RAIL IN A CONTINUOUS UNIT SHALL NOT BE CAST UNTIL ALL SLAB CONCRETE IN THE UNIT HAS BEEN CAST AND HAS REACHED A MINIMUM COMPRESSIVE STRENGTH OF 20.7 MPa.

WHEN COMPRESSION JOINT SEAL OR EVAZOTE JOINT SEAL IS REQUIRED, THE JOINT IN THE DECK SHALL BE SAWED PRIOR TO THE CASTING OF BARRIER RAIL.

ALL REINFORCING STEEL IN BARRIER RAILS SHALL BE EPOXY COATED.

THE #16 S3 AND #16 S4 BARS SHALL BE INSTALLED, USING AN ADHESIVE ANCHORING SYSTEM, AFTER SAWING THE JOINT. FOR ADHESIVELY ANCHORED ANCHOR BOLTS OR DOWELS, SEE SPECIAL PROVISIONS. THE YIELD LOAD FOR THE #16 S3 AND #16 S4 BARS IS 82.7 kN. FIELD TESTING FOR THE ADHESIVE BONDING SYSTEM IS NOT REQUIRED.

VERTICAL GROOVED CONTRACTION JOINTS, 12mm IN DEPTH, SHALL BE TOOLED IN ALL EXPOSED FACES OF THE BARRIER RAIL AND IN ACCORDANCE WITH ARTICLE 825-10(B) OF THE STANDARD SPECIFICATIONS. THE CONTRACTION JOINT SHALL BE LOCATED AT EACH THIRD POINT BETWEEN BARRIER RAIL EXPANSION JOINTS. ONLY ONE CONTRACTION JOINT IS REQUIRED AT MIDPOINT OF BARRIER RAIL SEGMENTS LESS THAN 6.1m IN LENGTH AND NO CONTRACTION JOINTS ARE REQUIRED FOR THOSE SEGMENTS LESS THAN 3.5m IN LENGTH.

BAR TYPES

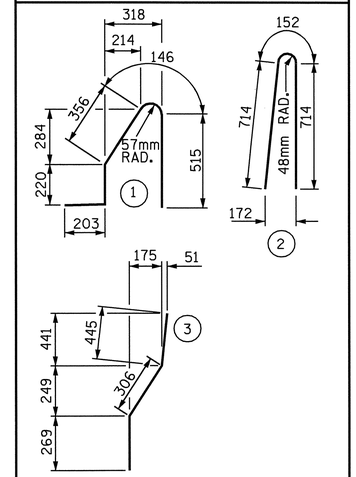

ALL BAR DIMENSIONS ARE OUT TO OUT

BILL OF MATERIAL

FOR CONCRETE BARRIER RAIL ONLY

BAR	NO.	SIZE	TYPE	LENGTH	WEIGHT
✱ B1	56	#16	STR	7320	636
✱ B2	42	#16	STR	5980	390
✱ S1	310	#16	1	1440	693
✱ S2	310	#16	2	1580	760
✱ S3	12	#16	3	1020	19
✱ S4	12	#16	STR	960	18

✱ EPOXY COATED REINFORCING STEEL	2516 kg
CLASS AA CONCRETE	24.1 CU. METER
CONCRETE BARRIER RAIL	96.128 METERS

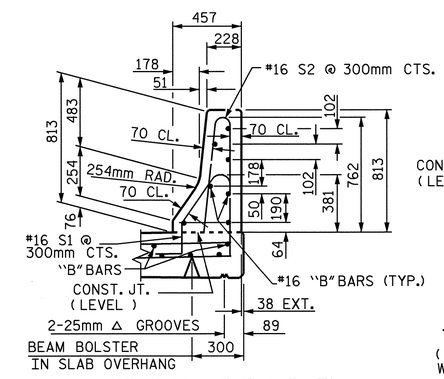

SECTION THRU RAIL

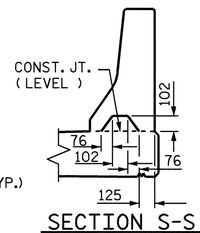

SECTION S-S

AT DAM IN OPEN JOINT
(THIS IS TO BE USED ONLY WHEN SLIP FORM IS USED)

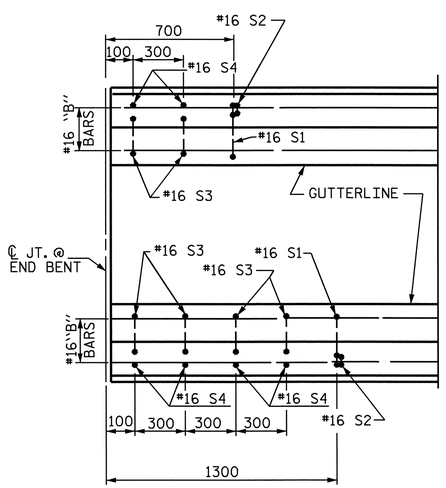

PLAN

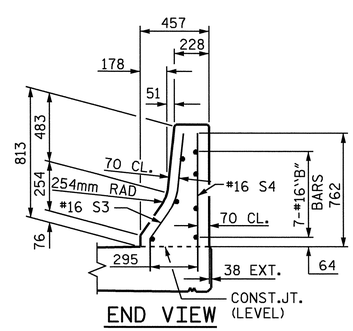

END VIEW

END OF RAIL DETAILS

FOR ADHESIVE ANCHORING AT SAWED JOINTS

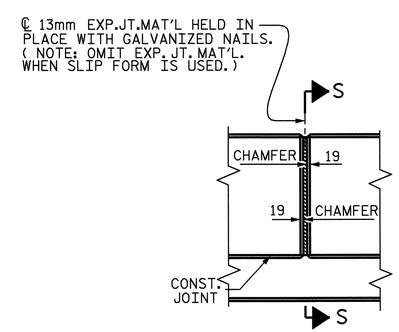

ELEVATION AT EXPANSION JOINTS

BARRIER RAIL DETAILS

PROJECT NO. R-2206C
LINCOLN-CATAWBA COUNTY
STATION: 223+03.850 -L-

STATE OF NORTH CAROLINA
DEPARTMENT OF TRANSPORTATION
RALEIGH

STANDARD

CONCRETE BARRIER RAIL
RIGHT LANE

NORTH CAROLINA PROFESSIONAL SEAL 022516 ENGINEER EMILY E. MURRAY
9/10/04

REVISIONS						SHEET NO.
NO.	BY:	DATE:	NO.	BY:	DATE:	S-179
1			3			TOTAL SHEETS 374
2			4			

STR. #10 STD. No. CBR1SM

ASSEMBLED BY : PEGGY ADKINS	DATE : 2-04		
CHECKED BY : T. AVERETTE	DATE : 3-04		
DRAWN BY : ARB 5/87	REV. 8/16/99	RWW/LES	
CHECKED BY : SJD 9/87	REV. 10/17/00	RWW/LES	
	REV. 5/7/03	RWW/JTE	

07-SEP-2004 11:03
W:\squadq\r2206c\Final Plans\Str. 10\R2206C_SD_BR_10.dgn
dcrutcher